LTH236 SERIES

DC/ DC Converter 12V input: 240 Watts

HELIOS POWER SOLUTIONS

Features

- Designed for 12VDC input applications
- 240 watts output power
- Convection cooled: No fans
- Over voltage protection
- Overload and short circuit protection
- MTBF > 130,000hrs
- Specials output voltage options
- Any output from 24vdc ~ 130vdc possible
- **N+1** Redundancy Applications – option
- Output DC Fail alarm -Option
- Battery Charging applications - Option
- 19in Rack Mount - Option

General Specifications

Input Voltage	**12VDC** (10-16)
Input Protection	Reverse polarity protection. Inrush current limiting Input Fuse
Isolation	Input - Output 500vdc Input - Chassis 500vdc Output – Chassis 500vdc
Efficiency	Model dependent , typically 80%
Output voltage	See tables
Output Power	240 watts
Voltage adjustment	Customer specified, typically 5%
Regulation	Output voltage dependant Typically: ±3-5%
Output Protection	Over voltage protection Constant Current limiting & short circuit protection
EMI	EN55022 class A
Immunity	EN61000-4
Shock & Vibration	Designed to meet IEC61373 Cat 1 A & B
Operating Temp.	0°C to +50°C at full load. +70°C at 50% load.
Dimensions	254 x 113 x 58mm 1.2kg (F2)

Description

The **LTH236** Series DC/DC converter, was designed for **12VDC input** applications and is part of a wider range of units that are available with input voltage options up to 600VDC

It is a mature design with a proven track record in many applications. The unit is equipped with reverse polarity protection on the input, surge protection and input & output filtering.

Cooling is by natural convecti on and optional ruggedizing & conformal coating is available, for immunity to shock, vibration, humidity, moisture, dust and insects.

An optional redundancy diode allows parallel connection to achieve higher output power or N+1 redundancy. This chassis-mount design is optimized for low component count and high efficiency.

Options

Output Voltage	Special voltage output, up to 130VDC
Alarm	Voltage Free contacts
N+1 Redundancy	Output redundancy diode for parallel operation
Eurocard	Plug in Eurocard option: 3U x 14HP x 220mm
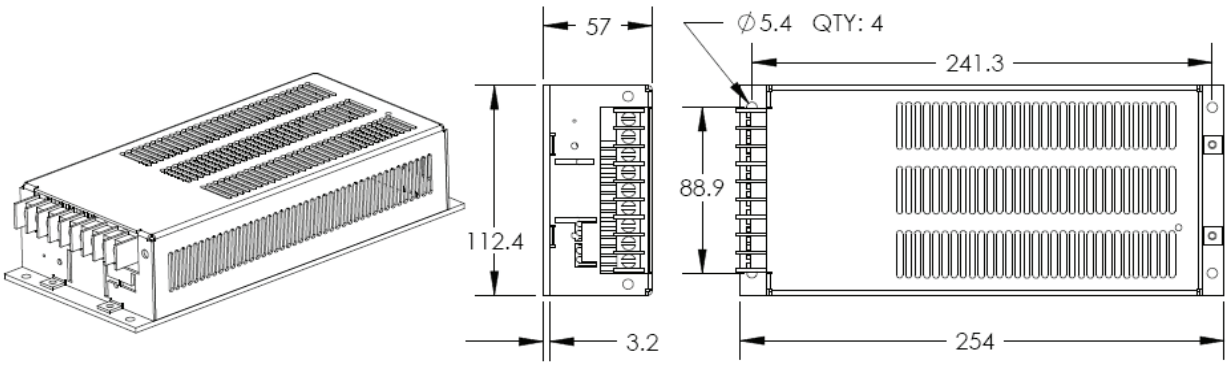
Model	Output V	Output A	Power W
LTH236-12-13.8FT	13.8V	15A	200W
LTH236-12-24FT	24V	10A	240W
LTH236-12-28FT	28V	8.5A	240W
LTH236-12-36FT	36V	6.6A	240W
LTH236-12-48FT	48V	5A	240W
LTH236-12-110FT	110V	2.1A	240W