HELIOS POWER SOLUTIONS

MultiPlus-II Inverter/Charger

www.heliosps.com

MultiPlus-II 48/3000/35-32

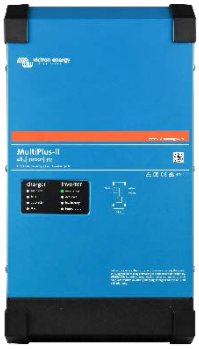

A MultiPlus, plus ESS (Energy Storage System) functionality

The MultiPlus-II combines the functions of the MultiPlus and the MultiGrid.
It has all the features of the MultiPlus, plus an external current sensor option which extends the PowerControl and PowerAssist function to 32A.
It also has all the features of the MultiGrid with built-in anti-islanding and an increasingly long list of country approvals.

PowerControl and PowerAssist - Boosting the capacity of grid or generator power

A maximum generator or grid current can be set. The Multi will then take account of other AC loads and use whatever is extra for battery charging, thus preventing the generator or grid from being overloaded (PowerControl function).
PowerAssist takes the principle of PowerControl to a further dimension. Where peak power is so often required only for a limited period, the Multi will compensate insufficient generator, shore or grid power with power from the battery. When the load reduces, the spare power is used to recharge the battery.

ESS: Energy Storage Systems

The MultiPlus can be used in off grid as well as grid connected PV and other alternative energy systems.
Several system configurations are possible, for more detailed information see the ESS Design and configuration manual.

On-site monitoring and control

Several options are available: Battery Monitor, Digital Multi Control Panel, Color Control Panel, Bluetooth (Venus GX or Color Control panel needed), laptop or computer.

Remote configuring and monitoring

Install a Venus GX or a Color Control Panel to connect to the internet.
Data can be stored and displayed on our VRM (Victron Remote Management) website, free of charge.
When connected to the Ethernet, systems can be accessed remotely and settings can be changed.

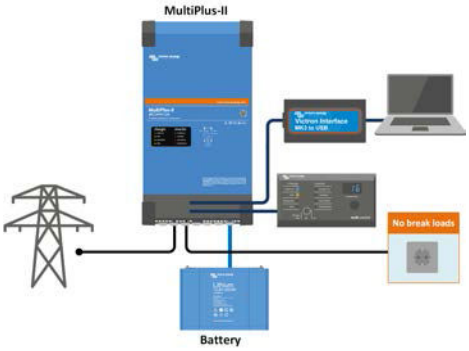

Standard mobile or off-grid application
Loads that should shut down when AC input power is not available can be connected to a second output (not shown). These loads will be taken into account by the PowerControl and PowerAsssist function in order to limit AC input current to a safe value.

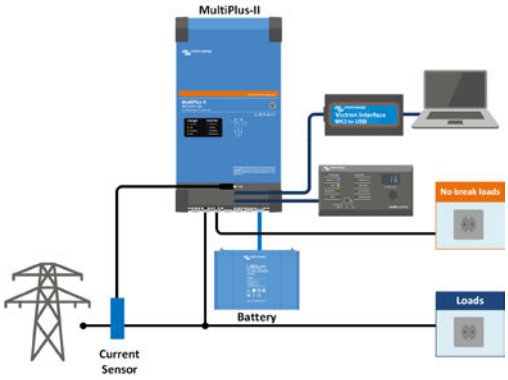

Standard mobile or off-grid application with external current sensor
Maximum current sensing range: 32A

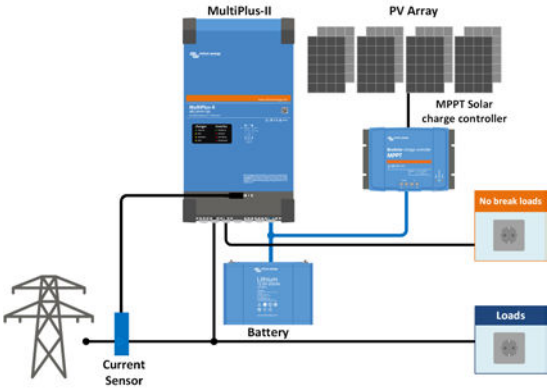

Grid parallel topology with MPPT solar charge controller
Certain critical loads only are protected against a power outage.
The MultiPlus-II will use data from an external AC current sensor or power meter to optimise self-consumption and, if required, to prevent back feed of excess solar power into the grid. In case of a power outage, the MultiPlus-II will continue to supply the critical loads

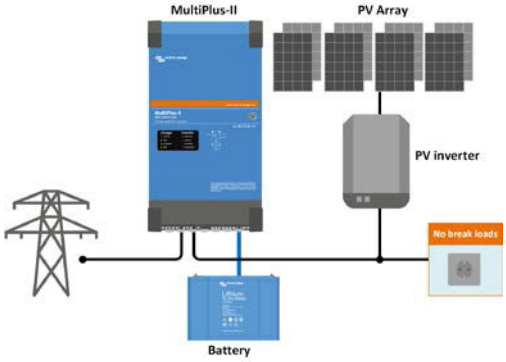

Grid in-line topology with PV inverter
PV power is directly converted to AC.
The MultiPlus-II will use excess PV power to charge the batteries or to feed power back into the grid, and will discharge the battery or use power from the grid to supplement a shortage of PV power. In case of a power outage, the MultiPlus-II will disconnect the grid and continue to supply the loads.

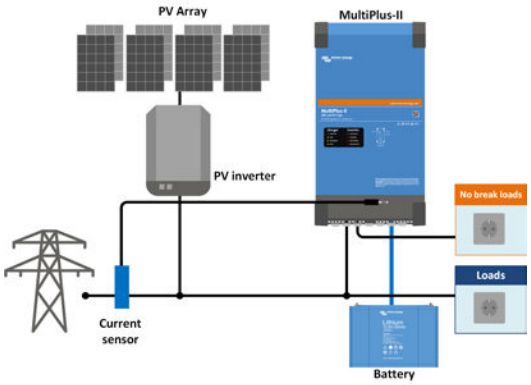

Grid parallel topology with PV inverter
In this topology the PV inverter will shut down in case of a power outage.
The MultiPlus-II will use data from the external AC current sensor or power meter to optimize self-consumption and, if required, to prevent back feed of excess solar power into the grid.

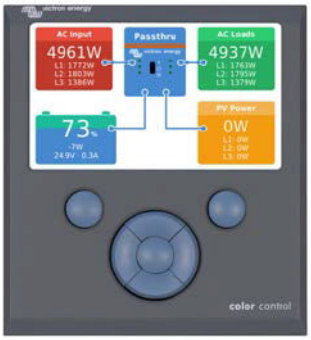

Color Control Panel (CCGX)
Provides intuitive system control and monitoring
Besides system monitoring and control the CCGX enables access to our free remote monitoring website: the VRM Online Portal

VRM app
Monitor and manage your Victron Energy system from your smart phone and tablet.
Available for both iOS and Android.

VRM Portal
Our free remote monitoring website (VRM) will display all your system data in a comprehensive graphical format. System settings can be changed remotely via the portal. Alarms can be received by e-mail.

MultiPlus-II	48/3000/35
PowerControl & PowerAssist	Yes
Transfer switch	32A
Maximum AC input current	32A
INVERTER	
DC Input voltage range	38 – 66 V
Output	Output voltage: 230 VAC ± 2% Frequency: 50 Hz ± 0,1% (1)
Cont. output power at 25°C (3)	3000 VA
Cont. output power at 25°C	2400 W
Cont. output power at 40°C	2200 W
Cont. output power at 65°C	1700 W
Maximum apparent feed-in power	2500VA
Peak power	5500 W
Maximum efficiency	95 %
Zero load power	11 W
Zero load power in AES mode	7 W
Zero load power in Search mode	2 W
CHARGER	
AC Input	Input voltage range: 187-265 VAC Input frequency: 45 – 65 Hz
Charge voltage 'absorption'	57,6 V
Charge voltage 'float'	55,2 V
Storage mode	52,8 V
Maximum battery charge current (4)	35 A
Battery temperature and voltage sensor	VE.Bus Smart dongle (optional)
GENERAL	
Auxiliary output	Yes (32 A) Directly connected to the AC input
Programmable relay (5)	Yes
Protection (2)	a - g
VE.Bus communication port	For parallel and three phase operation, remote monitoring and system integration
General purpose com. port	Yes, 2x
Remote on-off	Yes
Operating temperature range	-40 to +65°C (fan assisted cooling)
Humidity (non-condensing)	max 95%
ENCLOSURE	
Material & Colour	steel, blue RAL 5012
Protection category	IP22
Battery-connection	Two M6 bolts
230 V AC-connection	Screw terminals 13 mm² (6 AWG)
Weight	18 kg
Dimensions (hxwxd)	499 x 268 x 141 mm
STANDARDS	
Safety	EN-IEC 60335-1, EN-IEC 60335-2-29, EN-IEC 62109-1, EN-IEC 62109-2
Emission, Immunity	EN 55014-1, EN 55014-2 EN-IEC 61000-3-2, EN-IEC 61000-3-3 IEC 61000-6-1, IEC 61000-6-2, IEC 61000-6-3
Uninterruptible power supply	IEC 62040-1, AS 620401.1
Anti-islanding	VDE-AR-N 4105, TOR-D4, AS/NZS 4777.2, NRS 097-2-1, UTE C15-712-1, C10/11, RD 1699-RD 413, G59/3-2, G83/2

1) Can be adjusted to 60 Hz
2) Protection key:
   a) output short circuit
   b) overload
   c) battery voltage too high
   d) battery voltage too low
   e) temperature too high
   f) 230 VAC on inverter output
   g) input voltage ripple too high
3) Non-linear load, crest factor 3:1
4) At 25°C ambient
5) Programmable relay which can be set for general alarm, DC under voltage or genset start/stop function. AC rating: 230V / 4A, DC rating: 4A up to 35VDC and 1A up to 60VDC

Current sensor 100A:50mA
To implement PowerControl and PowerAssist and to optimize self-consumption with external current sensing. Maximum current: 32A.
Length of connection cable: 1 meter.
(order separately)

Digital Multi Control Panel
A convenient and low cost solution for remote monitoring, with a rotary knob to set PowerControl and PowerAssist levels.

HELIOS POWER SOLUTIONS