LQ Series 10 kW Regulated High Voltage DC Power Supplies

1 kV to 12 kV Rack Mount CE Compliant

Parallelable To 50 kW

200, 380, 415 & 480 VAC input Options

Fully RoHS Compliant

The LQ family are sophisticated, 10 kW, high voltage power supplies with low ripple and noise. They are air insulated, fast response units, with tight regulation.

Please refer to Technology > Applications page on our web site for typical applications.

The LQ Series are fully compliant with the following European Harmonized EMI Directives:

- EN61010/ IEC61010, Safety
- EN61000-6-4, Conducted and Radiated Emissions
- EN61000-6-2:2005, Conducted and Radiated Immunity
- 2011/65/EU, Restriction of the use of Hazardous Substances (RoHS)

CE (Meets all applicable directives), UKCA (Meets all applicable legislation)

Models from 0 to 1 kV through 0 to 12 kV, 8.75" H x 19" W x 24.0" D, 60 lbs.

Features:

Arc Quench. The HV output is inhibited for a short period after each load arc to help extinguish the arc.

Arc Count. Internal circuitry constantly senses and integrates arcs that occur over a given time. In the event a system or load arcing problem develops and exceeds factory-set parameters, the power supply will cycle off in an attempt to clear the fault and then automatically restart after a preset "off dwell time".

Pulse-Width Modulation. Off-the-line pulse-width modulation provides high efficiency and a reduced parts count for improved reliability.

Low Ripple. Ripple is typically less than 0.1% RMS of rated voltage at full load.

Air Insulated. The LQ Series features "air" as the primary dielectric medium. No oil or encapsulation is used to impede serviceability or increase weight.

Input Voltage. 208 VAC standard. 380, 415 & 480 VAC optional.

Parallelable. One master supply and up to 4 slave supplies for a maximum of 50 kW.

Constant Voltage/Constant Current Operation. Automatic crossover from constant-voltage to constant-current regulation provides protection against overloads, arcs, and short circuits.

Constant Current/Current Trip. A rear panel switch allows selection of either current mode.

Redundant Thermal Overload Protection. Thermostats and fan RPM sensing shut down the power supply due to over temperature or reduced fan speeds.

Tight Regulation. Voltage regulation is better than 0.05% for allowable line variations and 0.05% for allowable load variations. Current regulation is better than 0.5% from short circuit to rated voltage.

Warranty. All power supplies are warranted for one year. A formal warranty statement is available.

Specifications

(Specifications apply from 5% to 100% rated voltage. Operation is guaranteed down to zero voltage with a slight degradation of performance.)

Input: 187 - 228 V RMS, three-phase, 48-63 Hz, 16.0 kVA maximum at full load (less than 45 A/phase). Inrush current is less than 150 A. A five position terminal strip is provided for AC line conection. **Mains service must be protected with fuses or circuit breakers with a maximum rating of 125 A for 208 VAC models & 100 A for 380 through 480 VAC models.**

Efficiency: Typically greater than 85% at full load.

Output: Continuous, stable adjustment from 0 to rated voltage/current by means of panel-mounted 10-turn potentiometers (0.05% resolution), or external 0 to +10 V signals. Repeatability better than 0.1% of setting.

Voltage programming accuracy: 1% of setting + 0.5% of rated output. Resolution is a function of the programming method used.

Current programming accuracy: 1% of setting plus 1% of rated output.

Line Regulation: < +/- 0.05% of rated output for a +/-10% input line variation.

Load Regulation: < +/- 0.05% of rated output for a no load to full load change.

Ripple: < 0.1% +1V RMS of rated output voltage.

Current Regulation: Better than 0.5% from short circuit to rated voltage at any load condition.

Voltage Monitor: 0 to +10 V equivalent to 0 to rated voltage. Accuracy: 1% of reading + 0.5% of rating. Output impedance is 10 K Ohm.

Current Monitor: 0 to +10 V equivalent to 0 to rated current. Accuracy: 1% of setting plus 1% of rated output. Output impedance is 10 K ohm.

Stability: 0.01% per hour after 1/2 hour warm-up, 0.05% per 8 hours.

Voltage Rise Time Constant: 50 ms typical, using either HV enable or remote programming control.

Temperature Coefficient: 0.01%/° C.

Ambient Temperature: -20 to +40° C, operating; -40 to +85° C, storage.

Polarity: Available with either positive or negative polarity.

Protection: Automatic current regulation protects against all overloads, including arcs and short circuits. Thermal switches and rpm sensing fans protect against thermal overload. Circuit breaker, fuses, surge-limiting resistors, and low energy components provide ultimate protection.

Arc Quench. An arc quench feature provides sensing of each load arc and quickly inhibits the HV output for approximately 20 ms after each arc.

Arc Count: Internal circuitry senses the number of arcs caused by external load discharges. If the rate of consecutive arcs exceeds approximately one arc per second for five arcs, the supply will turn off for approximately five seconds to allow clearance of the fault. After this period, the supply will return automatically to the programmed output voltage value with the voltage rise time constant indicated. If the load fault still exists, the above cycle will be repeated.

Current Limit: In current limit mode the power supply will regulate the load current at the programmed current level with automatic crossover between voltage and current regulating modes.

Current Trip: A switch located on the rear of the control panel assembly allows the selection of current limit or current trip operation. When the switch is set to current trip mode, the HV output will disable and latch off when the load current reaches the programmed current level. Reset is accomplished by either cycling the AC power, toggling the HV enable signal, or by pushing the HV off/reset and then the HV on switches.

Front Panel Elements: The front panel contains all local control functions and indicators. These are: AC power on/off circuit breaker and indicator light, separate 10-turn controls with locking vernier dials used to set voltage and current levels, high voltage on switch, and high voltage off/reset switch. LED's indicate: when high voltage is on, output polarity, interlock, fault status, and whether the supply is operating in a voltage or current regulating mode. Output levels are indicated by voltage and current digital meters.

Rear Panel Elements: The rear panel contains the AC mains input connections with safety cover, AC power indicator, HV output, ¼-20 ground return stud, CL/CT switch, 25 pin "D" interface connector, and a 12 position terminal strip. The terminal strip provides local/remote signal selection, interlock, and remote HV ON/OFF functions.

Slave Front Panel Elements (20 - 50 kW Models): AC power on/off circuit breaker and indicator light, Bias, Tracking (Overvoltage), and thermal overload/low fan speed indicators and Slave voltage and current test points.

Remote Control Interface: All LQ family power supplies provide a standard user's remote interface.

The signals provided are:

Inputs: Safety interlock, output voltage and current program signals, high voltage enable and connections for remote HV on and off pushbuttons

Outputs: Output voltage and current monitor signals, HV enable status, I/V regulation mode status, fault status, and a +10 V reference source. Signal common and ground r eference terminals are also provided.

Optional Interfaces:

RS-232/USB computer interface (external add on assembly).

External Interlock: Open = off, closed = on. Normally latching except for "NC" option supplies where it is non-latching. The interlock indicator LED is lit when the interlock is open.

HV Enable:

Remote Mode: 0 - 1.5 V = OFF, 2.5 - 15 V = ON.

Local Mode: The HV output is permanently enabled.

HV Status, Fault and I/V Regulation Status: Each are a set of form "C" relay contacts.

Accessories: Detachable, 8 foot, shielded high voltage coaxial cable is provided. A 25 pin D-subminiature connector for customer interface is provided.

Regulatory: The system will meet the European conducted emission standards as specified in 2004/108/EC and the European Low Voltage Directive, 2006/95/EC.

Size: 8.75"H X 19"W X 24"D rack mounted chassis. Forced air cooling is employed.

Options

Symbol	Description
200	180 to 220 VRMS, 3-phase input, 48-63 Hz, derate output current by 10%
380	342 to 440 VRMS, 3-phase input, 48-63 Hz
415-50	370 to 460 VRMS, 3-phase input, 48-52 Hz
480-60	430 to 530 VRMS, 3-phase input, 57-63 Hz
5VC	0-5 V voltage and current program/monitor.
NC	Blank front panel, AC power breaker/switch and indicator only,

Symbol	Description
SS	Slow start ramp. Specify standard times of 5, 10, 15, 20, or 30 seconds ± 20% .
ZR	Zero start interlock. Voltage control, local or remote, must be at zero before HV will enable.
K01	RS-232/USB control and monitor
K02	RS-232/USB/Ethernet control and monitor

Please consult factory for special requirements.

Models

Output Power	Positive Polarity	Negative Polarity	Output Voltage	Output Current	Stored Energy	Output Cable
10 kW	LQ1P10.0	LQ1N10.0	0 - 1 kV	0 - 10 A	6 J	RG-8U
10 kW	LQ1.5P6.7	LQ1.5N6.7	0 - 1.5 kV	0 - 6.7 A	8 J	RG-8U
10 kW	LQ2P5.0	LQ2N5.0	0 - 2 kV	0 - 5 A	6 J	RG-8U
10 kW	LQ3P3.4	LQ3N3.4	0 - 3 kV	0 - 3.4 A	8.5 J	RG-8U
10 kW	LQ5P2.0	LQ5N2.0	0 - 5 kV	0 - 2 A	5 J	RG-8U
10 kW	LQ6P1.7	LQ6N1.7	0 - 6 kV	0 - 1.7 A	7 J	RG-8U
10 kW	LQ8P1.3	LQ8N1.3	0 - 8 kV	0 - 1.3 A	5.5 J	RG-8U
10 kW	LQ10P1.0	LQ10N1.0	0 - 10 kV	0 - 1 A	7.5 J	RG-8U
10 kW	LQ12P0.85	LQ12N0.85	0 - 12 kV	0 - 0.85 A	11 J	RG-8U
20 kW	LQ1P20.0	LQ1N20.0	0 - 1 kV	0 - 20 A	12 J	RG-8U
20 kW	LQ1.5P13.4	LQ1.5N13.4	0 - 1.5 kV	0 - 13.4 A	16 J	RG-8U
20 kW	LQ2P10.0	LQ2N10.0	0 - 2 kV	0 - 10 A	12 J	RG-8U
20 kW	LQ3P6.8	LQ3N6.8	0 - 3 kV	0 - 6.8 A	17 J	RG-8U
20 kW	LQ5P4.0	LQ5N4.0	0 - 5 kV	0 - 4 A	10 J	RG-8U
20 kW	LQ6P3.4	LQ6N3.4	0 - 6 kV	0 - 3.4 A	14 J	RG-8U
20 kW	LQ8P2.6	LQ8N2.6	0 - 8 kV	0 - 2.6 A	11 J	RG-8U
20 kW	LQ10P2.0	LQ10N2.0	0 - 10 kV	0 - 2 A	15 J	RG-8U
20 kW	LQ12P1.7	LQ12N1.7	0 - 12 kV	0 - 1.7 A	22 J	RG-8U

Outline

For Models Greater Than 20 kW, Please Consult Factory.

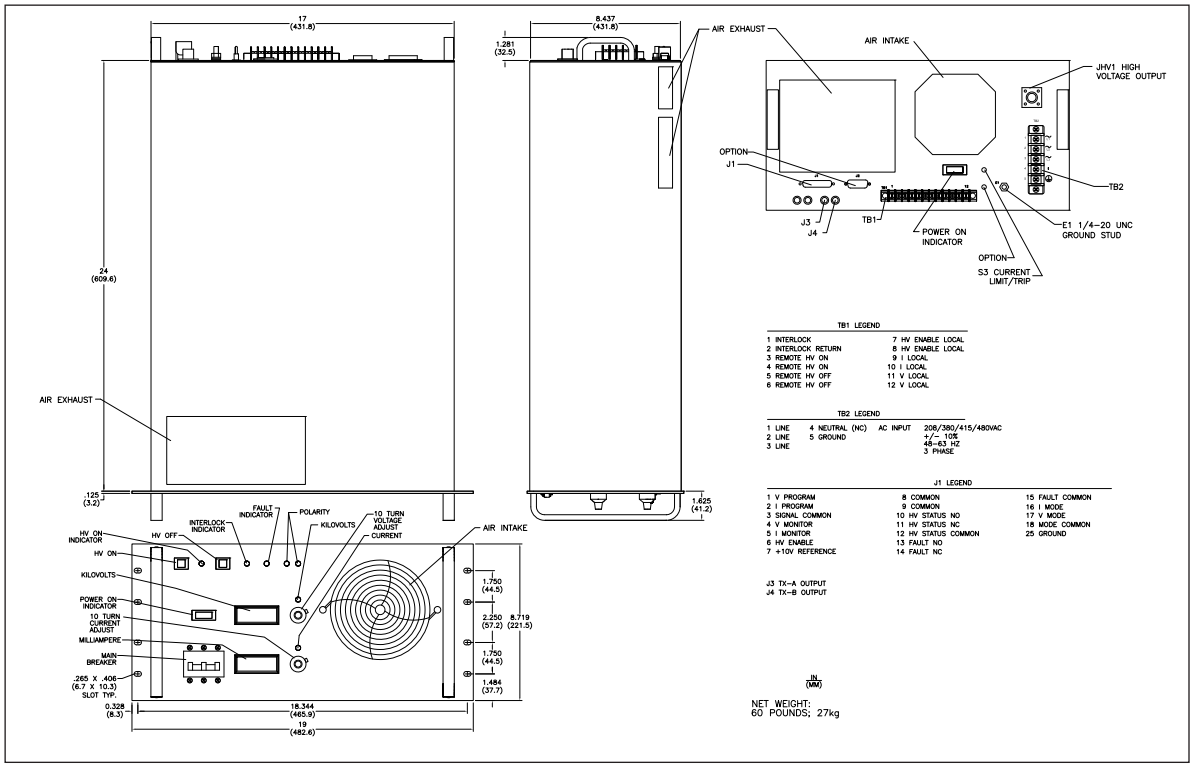
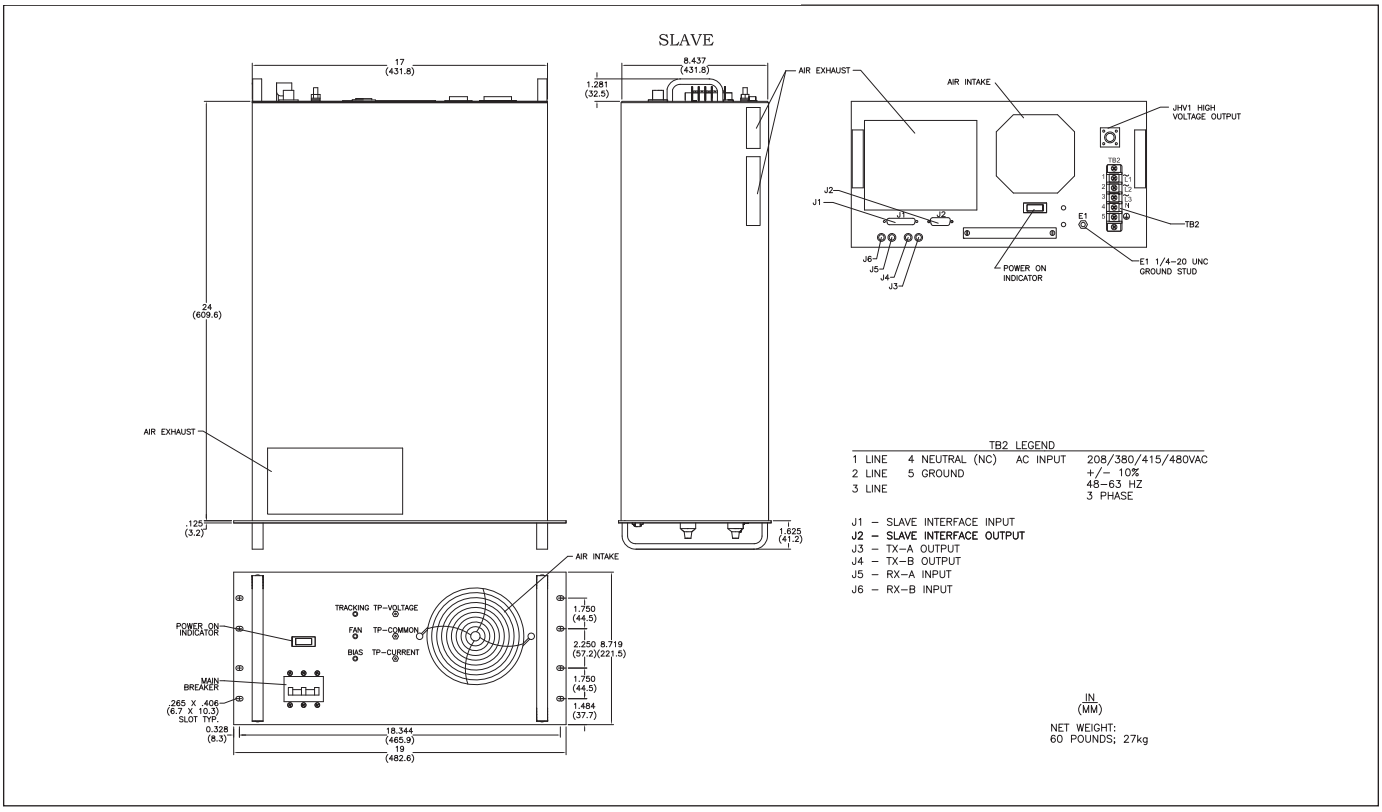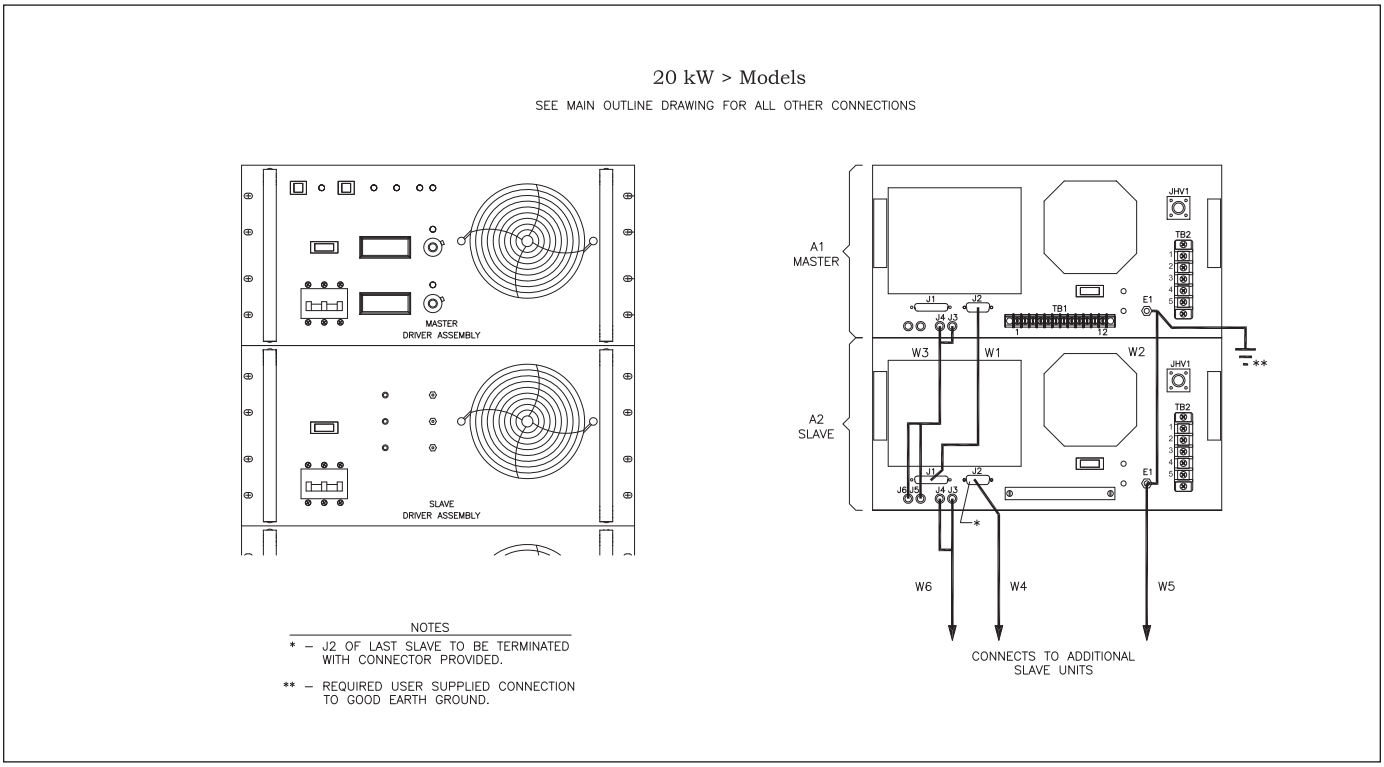
Slave and System Outline